Edgenuity

Warm-Up | Dimensional Analysis

The Importance of Dimensional Analysis

Unit conversion

- Medicine
- Construction
- _____
- Cooking
- Laboratory _____

Lesson Objectives

By the end of this lesson, you should be able to:

- Explain how dimensional analysis works.
- Solve scientific problems using dimensional analysis.

Science Practice: Convert between _____ using dimensional analysis.

Words to Know

Fill in this table as you work through the lesson. You may also use the glossary to help you.

dimensional analysis	A method applied in science that uses the relationships between _____ in order to solve problems and determine appropriate units

© Edgenuity, Inc.

Instruction | Dimensional Analysis

Slide 1

Lesson Question

Slide 3

Calculating the Cost

- Calculate the number of **slices** needed:
  - $6 \text{ people} \times 4 \text{ slices/person} =$ [ ] slices
- Calculate the number of **pizzas** needed:
  - $24 \text{ slices} \div 8 \text{ slices/pizza} = 3 \text{ pizzas}$
- Calculate the cost of pizzas:
  - $3 \text{ pizzas} \times \$15/\text{pizza} =$ [ ]

Dimensional Analysis

Dimensional analysis: a method applied in science that uses the relationships between quantities in order to solve problems and determine appropriate units

- Also called the [ ] Label or Unit-Label Method
- Used to check the validity of derived [ ] and computations

© Edgenuity, Inc.

Instruction | Dimensional Analysis

Slide 3

Using Dimensional Analysis to Calculate the Cost

- Set up a single equation:

$$6\text{ people} \times \frac{4\text{ slices}}{1\text{ person}} \times \frac{1\ \square}{8\text{ slices}} \times \frac{\$15}{1\text{ pizza}}$$

- Solve:

$$6\text{ people} \times \frac{4\text{ slices}}{1\text{ person}} \times \frac{1\text{ pizza}}{8\text{ slices}} \times \frac{\$15}{1\text{ pizza}} = \$\ \square$$

Equalities and Conversion Factors

Equalities

- How much of one unit is equal to another ☐
  - Examples:

$1\text{ cm} = 10\text{ mm}$

$12\text{ in} = 1\text{ ft}$

Conversion Factors

- ☐ used to convert from one unit to another
  - Examples:

$$50\text{ mm} \times \frac{1\text{ cm}}{10\ \square} = 5\text{ cm}$$

$$48\ \square \times \frac{1\text{ ft}}{12\text{ in}} = 4\text{ ft}$$

© Edgenuity, Inc.

Instruction | Dimensional Analysis

Slide 6

Using Conversion Factors

How many people could you feed if you had only $30 to spend?

- Create conversion factors from [ ]
- Invert [ ] factors as necessary

Solve:

$$\$30 \times \frac{1\,\text{pizza}}{\$15} \times \frac{8\,\text{slices}}{1\,\text{pizza}} \times \frac{1\,\text{person}}{4\,\text{slices}} = \boxed{}\ \text{people}$$

10

Metric Conversion Factors

How many **millimeters** are in 2.5 **km**?

- Set up the equation:

$$2.5\,\text{km} \times \frac{1{,}000\,\text{m}}{1\boxed{}} \times \frac{1{,}000\,\text{mm}}{1\boxed{}}$$

- Perform the conversion:

$$2.5\,\text{km} \times \frac{1{,}000\,\text{m}}{1\,\text{km}} \times \frac{1{,}000\,\text{mm}}{1\,\text{m}} = \boxed{}\ \text{mm}$$

© Edgenuity, Inc.

Slide 10

Metric Conversion Factors

How many **kilograms** are in 541 **ng**?

- Set up the equation:

$$541\,\text{ng} \times \frac{1\,\square}{1 \times 10^{9}\,\text{ng}} \times \frac{1\,\square}{1{,}000\,\text{g}}$$

- Perform the conversion:

$$541\,\text{ng} \times \frac{1\,\text{g}}{1 \times 10^{9}\,\text{ng}} \times \frac{1\,\text{kg}}{1{,}000\,\text{g}} = \square\ \text{kg}$$

A single molecule of sucrose (☐ sugar) has a ☐ of 5.68×10^{-25} kg. How many **molecules** of sucrose are present in 0.25 **mg** sucrose?

- Set up the equation:

$$0.25\,\text{mg} \times \frac{1\,\text{g}}{1{,}000\,\text{mg}} \times \frac{1\,\text{kg}}{1{,}000\,\text{g}} \times \frac{1\,\text{molecule}}{5.68 \times 10^{-25}\,\text{kg}}$$

- Solve:

$$0.25\,\text{mg} \times \frac{1\,\text{g}}{1{,}000\,\text{mg}} \times \frac{1\,\text{kg}}{1{,}000\,\text{g}} \times \frac{1\,\text{molecule}}{5.68 \times 10^{-25}\,\text{kg}} = \square\ \text{molecules}$$

© Edgenuity, Inc.

Instruction | Dimensional Analysis

Slide 13

Conversions Involving Units Raised to a Power

A cube of metal is 1 cm on each [ ]. What is its volume in [ ] millimeters?

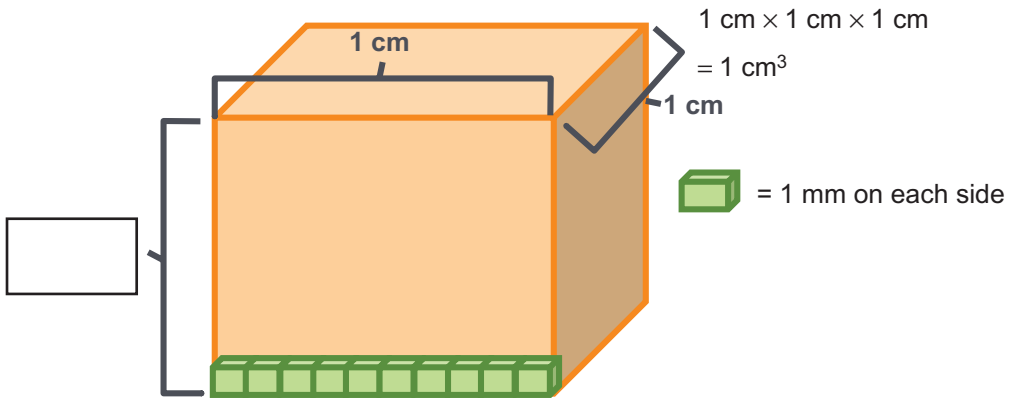

A cube of metal is 1 cm on each side. What is its volume in cubic millimeters?

- Set up the [ ]:

$$(1\,\text{cm})^3 \times \left(\frac{10\,\text{mm}}{1\,\text{cm}}\right)^3 = 1^3\,\text{cm}^3 \times \frac{10^3\,\text{mm}^3}{1^3\,\text{cm}^3}$$

- Perform the conversion:

$$1^3\,\text{cm}^3 \times \frac{10^3\,\text{mm}^3}{1^3\,\text{cm}^3} = [\quad]\ \text{mm}^3$$

Conversion factors must be raised to the same powers as quantities during dimensional analysis.

© Edgenuity, Inc.

Instruction | Dimensional Analysis

Slide 15

Constants Used as Conversion Factors

[ ] constants can also be used as conversion factors.

- Use units of constants to determine conversion factors
- Example:
  - Speed of light (meters per [ ]): Calculate time from distance or distance from time
- Significant figures:
  - Exact [ ] factor = No effect on significant figures
  - Measured/calculated conversion factor = Use usual significant figure rules

Slide 17

Determining Units without Numbers Using Dimensional Analysis

Dimensional analysis can also be useful in non-[ ] analysis.

- Units of a measurement can be determined without quantities ([ ])
- Set up conversion exactly as if there were quantities (comparing units with units)
- Example: Find the units for Charles' law constant
  - Charles' law equation: $T = KV$
  - $k = \frac{T}{V} = \frac{\text{kelvin}}{[\ ]}$

© Edgenuity, Inc.

Summary | Dimensional Analysis

Lesson Question

What method do chemists use to perform calculations?

Answer

Slide 2

How Dimensional Analysis Works

Dimensional analysis is a way of combining multiple conversion equations into a single operation.

- Conversion factors are derived from equalities and are then _____ to produce an overall conversion equation.
- Conversion factors equal _____ and can be arranged so that like units cancel, leaving only the desired units.
- Operations carried out on units are also applied to conversion factors (square, cube, and so forth).

© Edgenuity, Inc.

Summary | Dimensional Analysis

Slide 2

Uses of Dimensional Analysis

Dimensional analysis is important in everyday life and in _____ contexts.

- Converting between units
- Calculating one _____ given another
- Determining units of a constant

Use this space to write any questions or thoughts about this lesson.

© Edgenuity, Inc.