Edgenuity

Warm-Up | The History and Arrangement of the Periodic Table

Lesson Objectives

By the end of this lesson, you should be able to:

- Outline the historical development of the periodic table.
- Describe the arrangement of the periodic table and relate the properties of atoms to their _____ in the periodic table.
- Use the periodic table to classify _____.

Science Practice: Predict the properties of elements based on their position on the periodic table.

Words to Know

Fill in this table as you work through the lesson. You may also use the glossary to help you.

actinides	the _____ transition elements from actinium to lawrencium
alkali metal	a Group 1 or 1A _____
alkaline earth metal	a Group 2 or _____ metal
group or family	a _____ column of elements with similar physical and chemical properties in the periodic table
halogen	a _____ 17 or 7A element, which is highly reactive

© Edgenuity, Inc.

Warm-Up | The History and Arrangement of the Periodic Table

Words to Know

lanthanides	the inner _____ elements from lanthanum to lutetium
metal	an element, typically a solid, that is malleable and ductile and conducts _____ and heat well
noble gas	a Group 18 or 8A element; also called _____ gas
nonmetal	an element that is brittle and a poor _____; can be a solid, liquid, or gas
period or row	a _____ row of elements in the periodic table
periodic table	a table that organizes the chemical elements in order of increasing atomic number and that groups elements based on similarities in chemical properties and electron _____
semimetal (metalloid)	an element that has properties of both metals and _____
transition metal	an element in Groups 3 to _____ of the periodic table

© Edgenuity, Inc.

Instruction

The History and Arrangement of the Periodic Table

Slide 1

Lesson Question

Slide 2

The Periodic Table

The **periodic table** of elements is an organized display of the [ ] elements.

- Arranged in order of increasing atomic number
- Grouped according to similarities in chemical properties
- Grouped according to similarities in electron [ ]

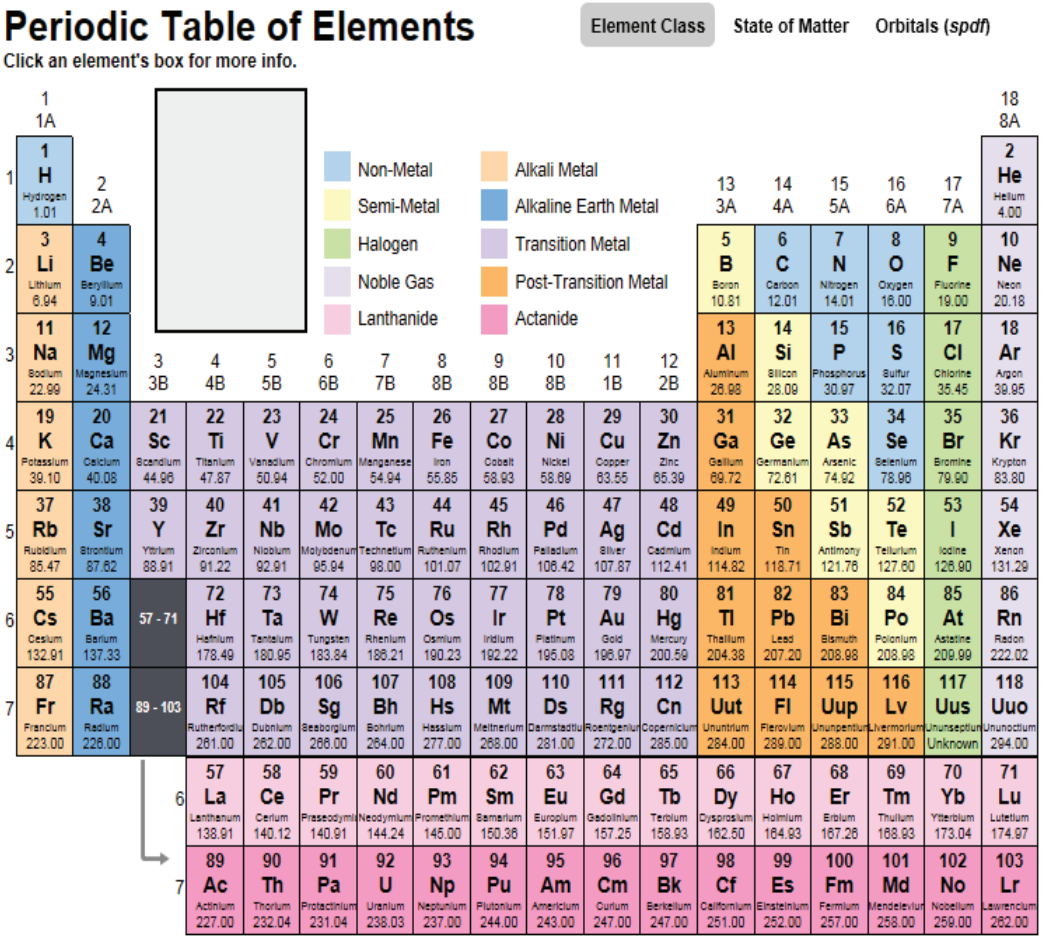

© Edgenuity, Inc.

Instruction | The History and Arrangement of the Periodic Table

Slide 2

Early Attempts at Creating a Periodic Table

Antoine Lavoisier (1789)

- *Elementary Treatise of Chemistry* in 1789
- First modern chemical [ ]

Early Attempts at Creating a Periodic Table

Antoine Lavoisier's 1789 classification of substances into four "element" groups			
acid-making elements	**gas-like elements**	**metallic elements**	**earthy elements**
sulphur	light	cobalt, mercury, tin	[ ] (calcium oxide)
phosphorus	caloric (heat)	copper, nickel, iron	magnesia (magnesium oxide)
charcoal ([ ])	oxygen	gold, lead, silver, zinc	barytes (barium sulphate)
	azote (nitrogen)	manganese, tungsten	argilla (aluminum oxide)
	hydrogen	platina (platinum)	silex (silicon dioxide)

Notice that all of the earthy elements like calcium oxide, magnesium oxide, and barium sulfate are all [ ] or combinations of elements.

© Edgenuity, Inc.

Instruction | The History and Arrangement of the Periodic Table

Slide 4

Early Attempts at Creating a Periodic Table

John Dobereiner (1829): [ ]

- Arranged elements with similar properties into [ ]

Triad Examples

- Alkaline earth metals
  - Ca (40 amu)
  - Sr (88 amu)
  - Ba (137 amu)
- [ ]
  - Cl (35.5 amu)
  - Br (80 amu)
  - I (127 amu)
- Alkali metals
  - Li (7 amu)
  - Na (23 amu)
  - K (39 amu)

Early Attempts at Creating a Periodic Table

John Newlands (1865)

- Arranged elements according to increasing [ ] mass
- Law of octaves
  - Repeating [ ] of similar properties every eight elements on the periodic table

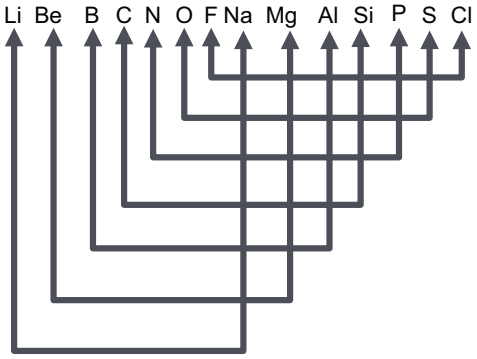

© Edgenuity, Inc.

Instruction | The History and Arrangement of the Periodic Table

Slide 4

Mendeleev's Periodic Table

Mendeleev (1869): first orderly arrangement of known elements

- Ordered elements by increasing atomic [ ]
- Observed repetition of [ ] properties
- Included blank spaces for [ ] not yet discovered

Slide 6

The Modern Periodic Table

Henry Moseley (1909)

- Revised periodic table to the modern version
- Arranged all the elements in order of increasing atomic [ ]
- Accounted for variations resulting from [ ]

Slide 9

Metals, Nonmetals, and Semimetals

Metals

- Malleable, ductile, [ ] electricity and heat well, mostly solids

Nonmetals

- Brittle, poor conductors, can be solid, [ ], or gas

Semimetals ([ ])

- Properties of both metals and nonmetals

© Edgenuity, Inc.

Instruction

The History and Arrangement of the Periodic Table

Slide 11

Periods

Period: a horizontal [ ] on the periodic table

- Atomic number increases from left to right across the period
- Chemical properties change systematically across the periodic table

Groups or Families

Group: [ ] on the periodic table; also known as a **family**

[ ] within a group have the same chemical properties.

Information for Each Element

Each element's entry on the periodic table shows the:

- [ ] symbol.
- element [ ].
- atomic number.
- [ ] atomic mass.

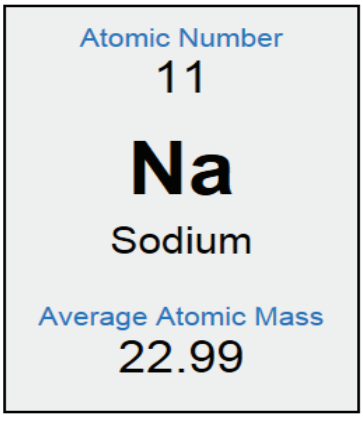

© Edgenuity, Inc.

Instruction | The History and Arrangement of the Periodic Table

Slide 14

Alkali Metals

Alkali metals

- Group 1 or [ ] on periodic table
- Typical properties:
  - Silver in color
  - Soft (can be cut with a knife)
  - Highly [ ] with oxygen and water
  - Able to [ ] in air
- Easily lose an electron to form a +1 cation

Alkaline Earth Metals

Alkaline earth metals

- Group [ ] or 2A of periodic table
- Typical properties:
  - Silver in color
  - More brittle than alkali metals
  - Somewhat reactive
  - Low in density, with low melting and boiling points
- Lose two [ ] to form a +2 cation

© Edgenuity, Inc.

Instruction | The History and Arrangement of the Periodic Table

Slide 17

Halogens

Halogens

- Group 17 or 7A
- Typical properties:
  - Highly reactive with [ ]
  - Toxic to organisms
  - Most occur as [ ] molecules (F_2, Cl_2, Br_2, I_2)
  - React with metals to form salts
- Easily [ ] an electron to form a –1 anion

Noble Gases

Noble gases

- Group 18 or [ ] of periodic table
- Inert gases ([ ])
- Typical properties:
  - Odorless and tasteless
  - Nonreactive and nonflammable
  - Extremely low [ ] points
  - Produce characteristic colors when excited electrically

© Edgenuity, Inc.

Instruction | The History and Arrangement of the Periodic Table

Slide 19

Transition Metals

Transition Metals

- Groups 3 to [ ] or B group
- Typical properties:
  - Form colored [ ]
  - May have unusual properties:
    - Magnetism
    - [ ] conductivity

Inner Transition Metals

Inner transition metals

- B [ ]
- **Lanthanides:** elements 57 to 71
- **Actinides:** elements 89 to 103
- Typical properties:
  - [ ]
  - Present in only trace amounts on [ ]

© Edgenuity, Inc.

Summary | The History and Arrangement of the Periodic Table

Lesson Question

How was the periodic table developed and how is it arranged?

Answer

Slide 2

The History of the Periodic Table

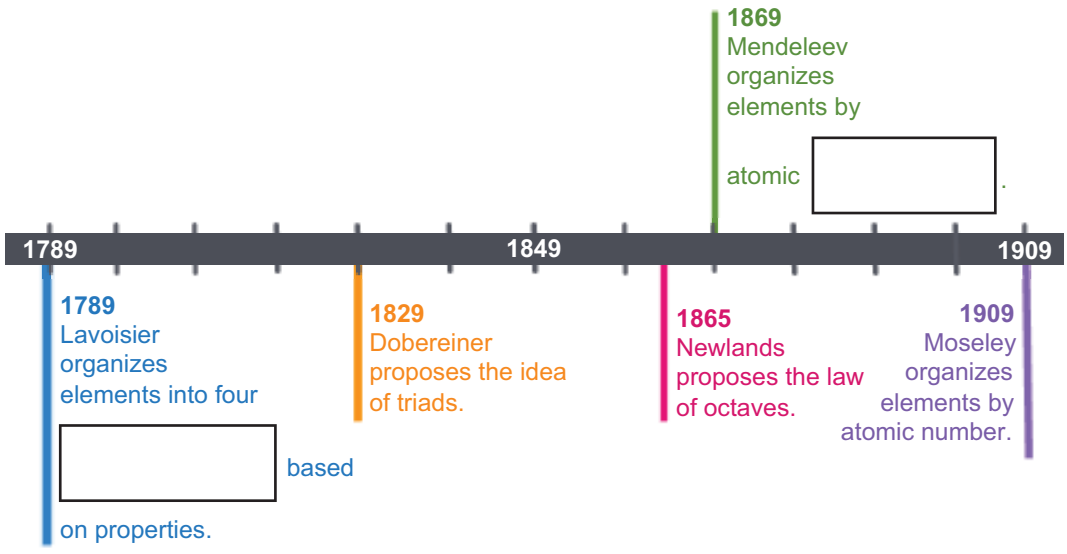

© Edgenuity, Inc.

Summary | The History and Arrangement of the Periodic Table

Slide 2

The Arrangement of the Periodic Table

The periodic table contains a great deal of information on the elements.

- *Periods* refer to horizontal rows of the periodic table.
- *Groups* or *families* refer to _____ columns of the periodic table.
- Cells of the periodic table contain information such as the atomic symbol, atomic number, atomic mass, name of the element, electron _____, and possible oxidation numbers.
- Elements can be categorized broadly as metals, nonmetals, or semimetals (metalloids).

Classification of the Elements

Groups

- Alkali metals: most reactive metals, soft, _____ quickly
- Alkaline earth metals: not as reactive as alkali metals, brittle, shiny
- Transition metals: form colored compounds, good conductors of electricity
- Halogens: most reactive nonmetals
- Noble gases: lowest chemical _____, used in lighting
- Inner _____ metals: radioactive, used in nuclear power plants

© Edgenuity, Inc.

Summary | The History and Arrangement of the Periodic Table

Use this space to write any questions or thoughts about this lesson.

© Edgenuity, Inc.